Name of Model			KAW-175G
Dimension (mm)	Width		1,740
	Length		735
	Height		384
Gas Consumption	Naturalgas		58.7 KW
	LPG		58.7 KW
Ignition			Piezo spark ignition
Gas connection (Inside Dia.)	Naturalgas		4/4 elbow (25A)
	LPG		4/4 elbow (25A)
Weight (Kg)			
Clearance from flammable materials (cm)	Around the griller	upper	hood
		side	20
		back	15
		front	————
	Structure of a Floor		Structure of non-combustible

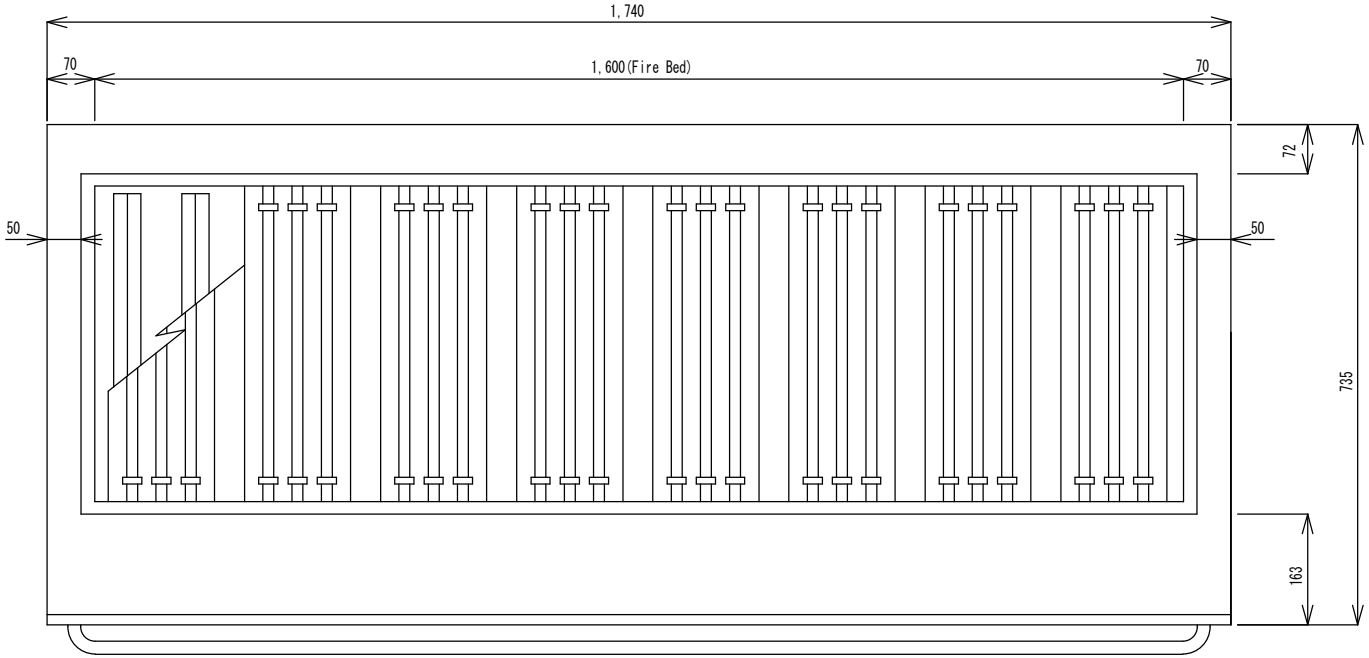

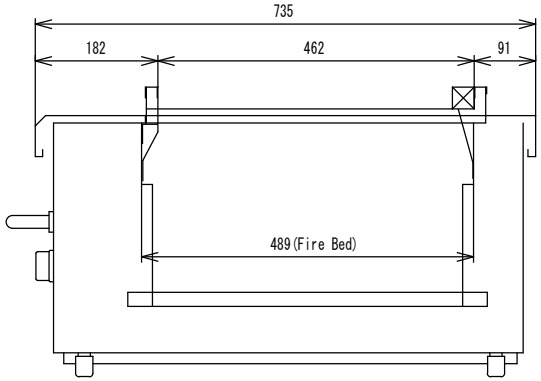

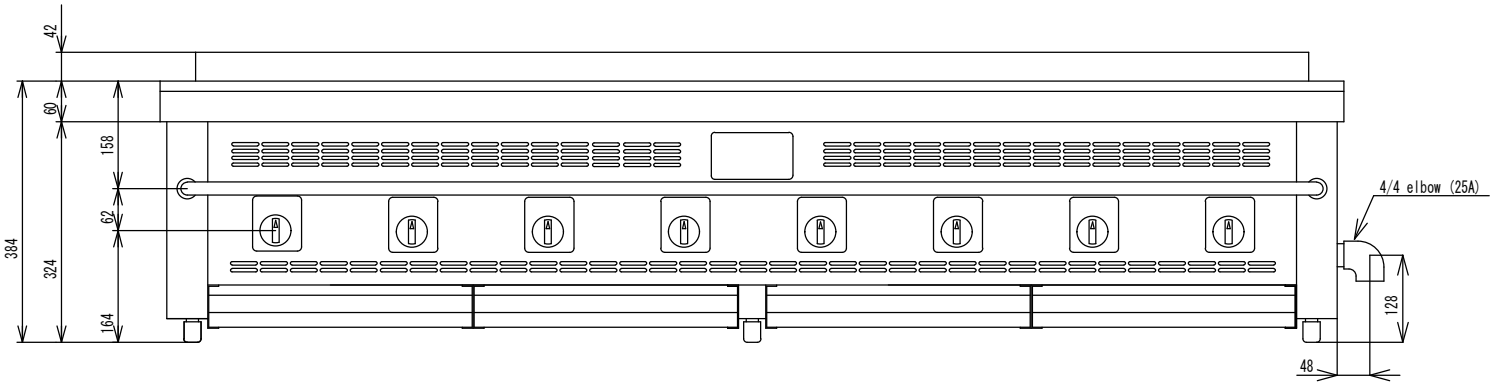

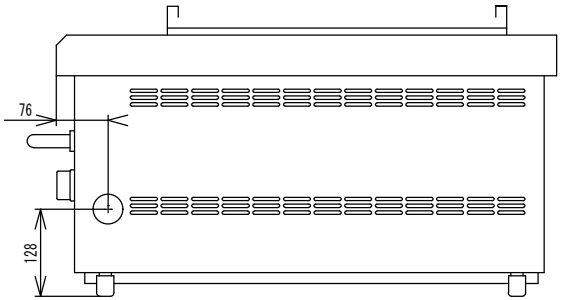

Kosei Kogyou Co.	Name of Product:	Model					
	Kosei Charcoal Griller	KAW-175G type					